SERIES 2500PW CAPTURED ALUMINUM CURTAINWALL

"SMALL MISSILE IMPACT"

GENERAL NOTES

1. This product has been evaluatedand is in compliance with the 8th Edition (2023) Florida Building Code (FBC) structural requirements including the "High Velocity Hurricane Zone" (HVHZ).

2. Product anchors shall be as listed and spaced as shown on details. Anchor embedment to base material shall be beyond wall dressing or stucco.

3. When used in "HVHZ", for installation above 30 feet above grade, this product complies with Section 1626 of the Florida Building Code as a small missile impact resistant product and does not require an impact resistant covering. For installations 30 feet or less above grade, this product must be protected with an impact resistant covering that complies with section 1626 of the Florida Building Code.

4. When used in areas outside of the "HVHZ" requiring wind borne debris protection for installations above 30 feet above grade, this product complies with Section 1609.1.2 of the 2023 FBC as a small missile impact resistant product and does not require an impact resistant covering. This product meets missile level "A" and includes Wind Zone 4 as defined in ASTM E 1996. For installations 30 feet or less above grade, this product must be protected with an impact resistant covering that complies with section 1626 of the Florida Building Code.

5. Site conditions that deviate from the details of this drawing require further engineering analysis by a licenced engineer or registered architect.

6. This product meets water infiltration requirements for "HVHZ".

SINGLE SPAN

MAX UNIT HEIGHT	MAX UNIT WIDTH	REINFORCED	GLAZING TYPE	MAX. D.L.O. DIMENSION	DESIGN PRESSURE (PSF)	
					POSITIVE	NEGATIVE
98.5"	49.125"	NO	G1; G2	46.625" X 93.50"	+115	-115

MULTIPLE SPAN

MAX SPAN HEIGHT	MAX UNIT WIDTH	REINFORCED	GLAZING TYPE	MAX. D.L.O. DIMENSION	DESIGN PRESSURE (PSF)	
					POSITIVE	NEGATIVE
18'-4"	49.125"	YES	G1; G2	46.625" X 93.50"	+115	-115

INDEX TO DRAWINGS

SHEET #	DESCRIPTION
1	INDEX TO DRAWINGS, DESIGN PRESSURES AND GENERAL NOTES
2	MULTI-SPAN ELEVATION
3	SINGLE SPAN ELEVATION
4	HORIZONTAL DETAILS (9/16" GLAZING)
5	HORIZONTAL DETAILS (1-5/16" GLAZING)
6	VERTICAL DETAILS
7	REINFORCING AND STACK JOINT DETAILS
8	INTERMEDIATE ANCHORS
9	INTERMEDIATE VERTICAL HEAD AND SILL ANCHORS; ANCHOR SCHEDULE
10	JAMB VERTICAL HEAD AND SILL ANCHORS
11	COMPONENTS
12	BILL OF MATERIALS AND GLAZING TYPES

GORDON D. THOMAS
LICENSE
No. 46718
STATE OF FLORIDA
PROFESSIONAL ENGINEER

7/24/25
FL 46718

5008 TAMPA WEST BLVD.
TAMPA, FLORIDA 33634
PHONE: (813) 889-0718
FAX: (813) 886-0666

SUN METALS

PRODUCT: SUN 2500PW SMALL MISSILE IMPACT

PART OR ASSEMBLY: INDEX TO DRAWINGS DESIGN PRESSURES & GEN. NOTES

NO	DATE	DESCRIPTION	BY
3	7/14/25	UPDATE TO 8TH ED. (2023) FBC	ECV
2	9/21/20	UPDATE TO 7TH ED. (2020) FBC	JCB
1	5/23/17	REVISE GLAZING	ECV

REVISIONS

DATE: 08/22/18

SCALE: NA

DWG. BY: CO

CHK BY: ECV

DRAWING NO.: FL-21463.2

SHEET: 1 OF 12

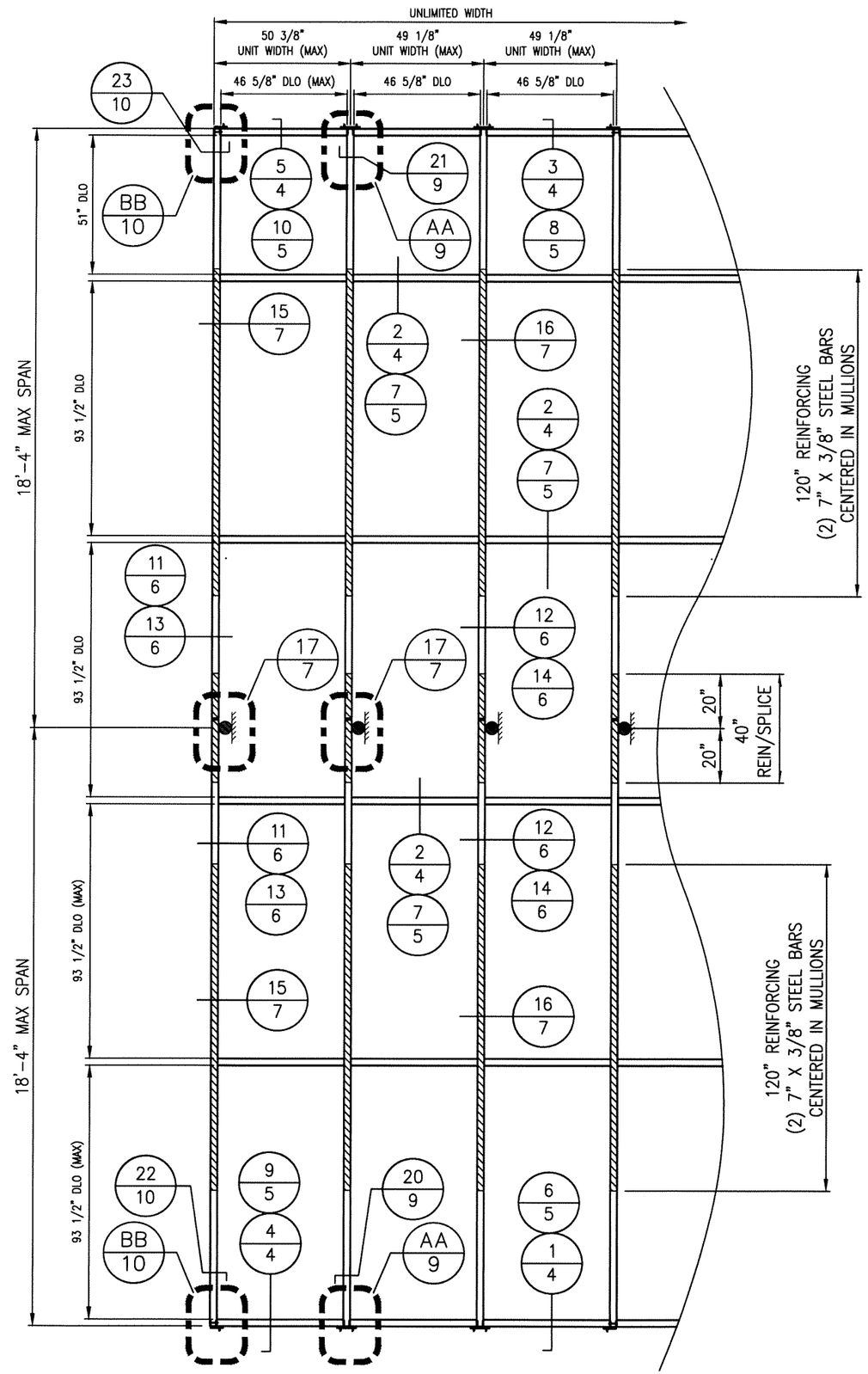

MULTI-SPAN CURTAINWALL
±115 PSF

GORDON D. THOMAS
LICENSE
No. 46718
STATE OF FLORIDA
PROFESSIONAL ENGINEER

7/26/25
FL 46718

5008 TAMPA WEST BLVD.
TAMPA, FLORIDA 33634
PHONE: (813) 889-0718
FAX: (813) 886-0666

SUN METALS

PRODUCT: SUN 2500PW SMALL MISSILE IMPACT

PART OR ASSEMBLY: MULTI-SPAN ELEVATION

NO	DATE	DESCRIPTION	BY
3	7/14/25	UPDATE TO 8TH ED. (2023) FBC	ECV
2	9/21/20	UPDATE TO 7TH ED. (2020) FBC	JCB
1	5/23/17	REVISE GLAZING	ECV

REVISIONS

DATE: 08/22/18

SCALE: 1/4"=1'-0"

DWG. BY: CO

CHK BY: ECV

DRAWING NO.: FL-21463.2

SHEET: 2 OF 12

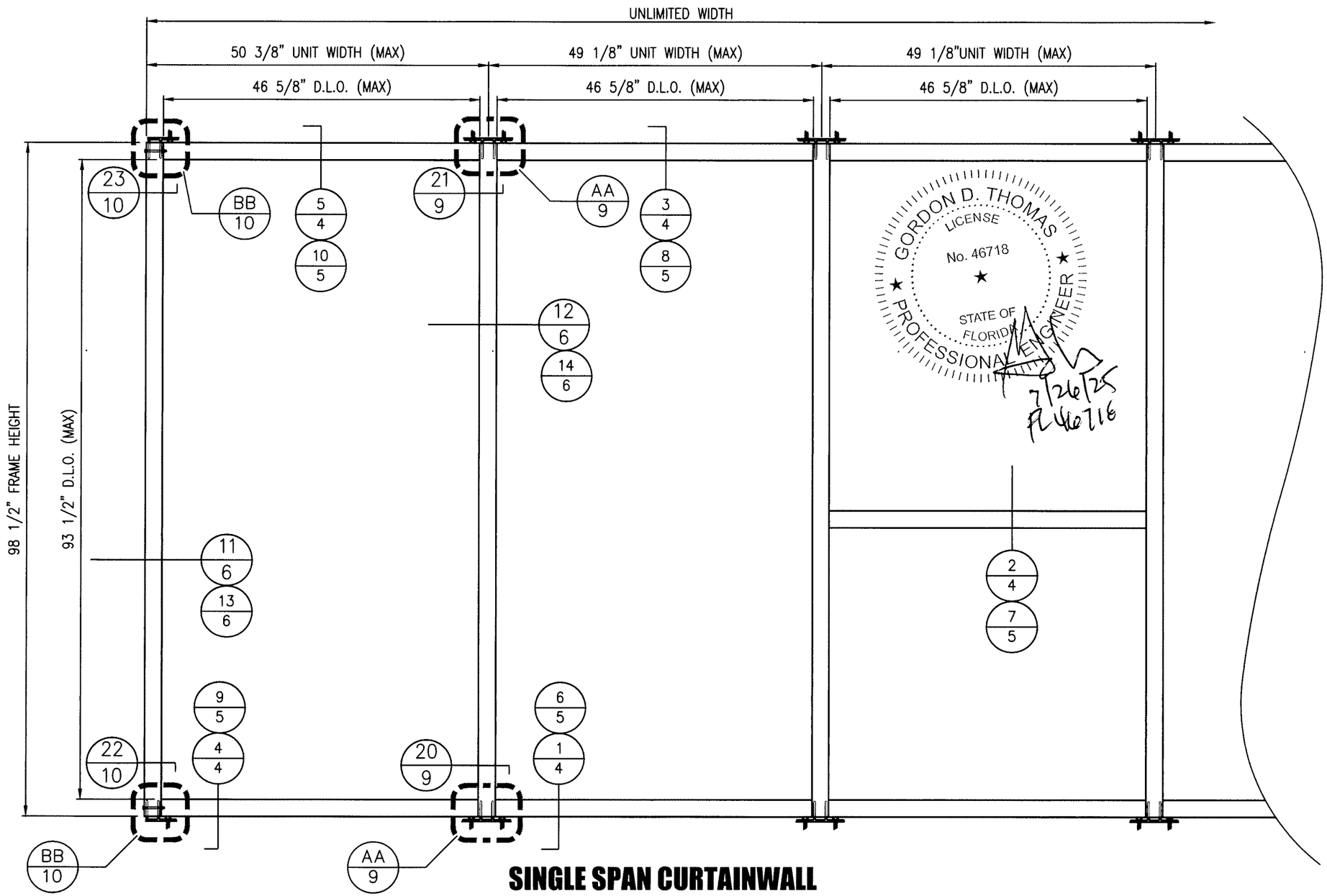

SINGLE SPAN CURTAINWALL

± 115 PSF

5008 TAMPA WEST BLVD.
TAMPA, FLORIDA 33634
PHONE: (813) 889-0718
FAX: (813) 886-0666

SUN METALS

PRODUCT: SUN 2500PW SMALL MISSILE IMPACT

PART OR ASSEMBLY: SINGLE SPAN ELEVATION

NO	DATE	DESCRIPTION	BY
3	7/14/25	UPDATE TO 8TH ED. (2023) FBC	ECV
2	9/21/20	UPDATE TO 7TH ED. (2020) FBC	JCB
1	5/23/17	REVISE GLAZING	ECV

REVISIONS

DATE: 08/22/18

SCALE: 3/4"=1'-0"

DWG. BY: CO

CHK BY: ECV

DRAWING NO.: FL-21463.2

SHEET: 3 OF 12

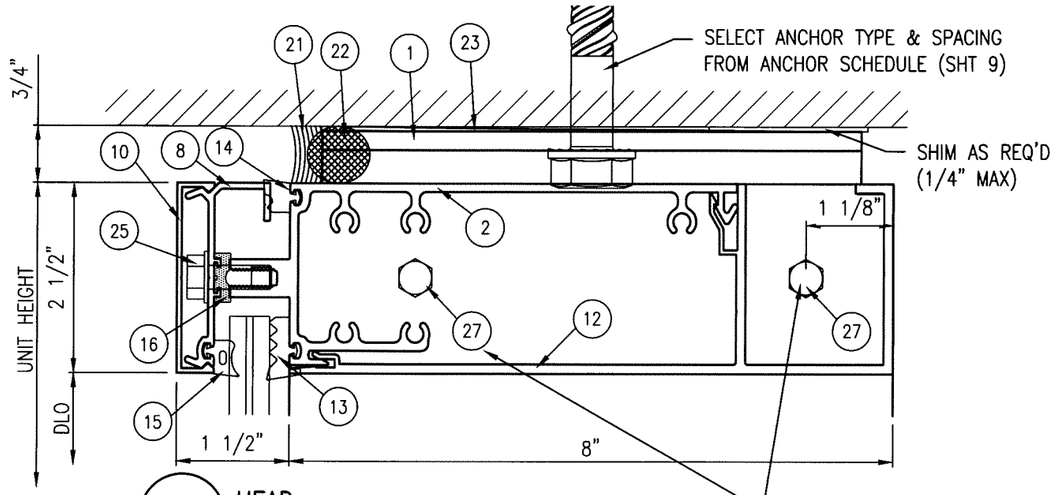

3 HEAD
9/16" (Dry Glazed)

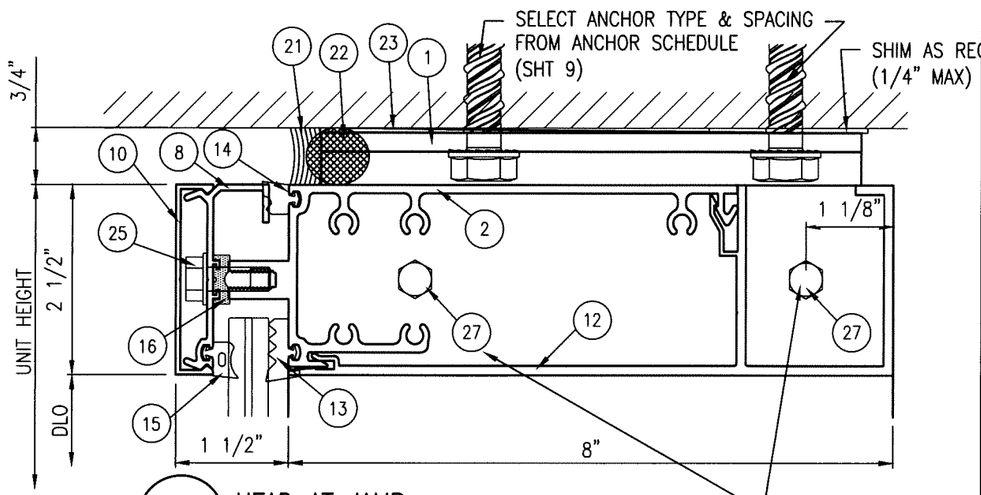

5 HEAD AT JAMB
9/16" (Dry Glazed)

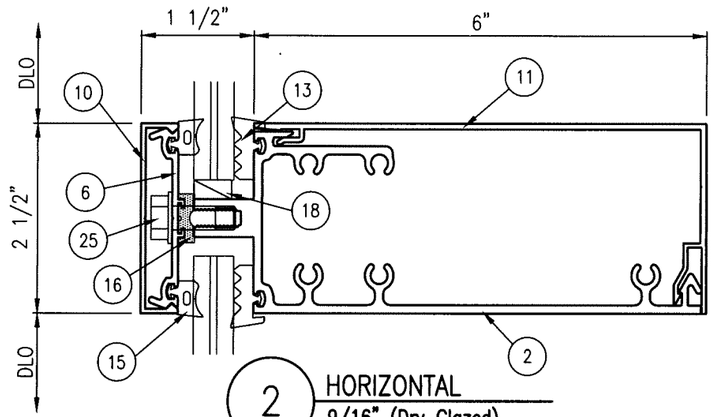

2 HORIZONTAL
9/16" (Dry Glazed)

9/16" GLAZING

NOTES:

1. FRAME HEAD, SILL AND HORIZONTALS ARE ATTACHED TO JAMBS/MULLIONS AT EACH END WITH 1/4" X 1-1/2" FH SMS.
2. REFERENCE SHEET 12 FOR GLAZING DETAILS.

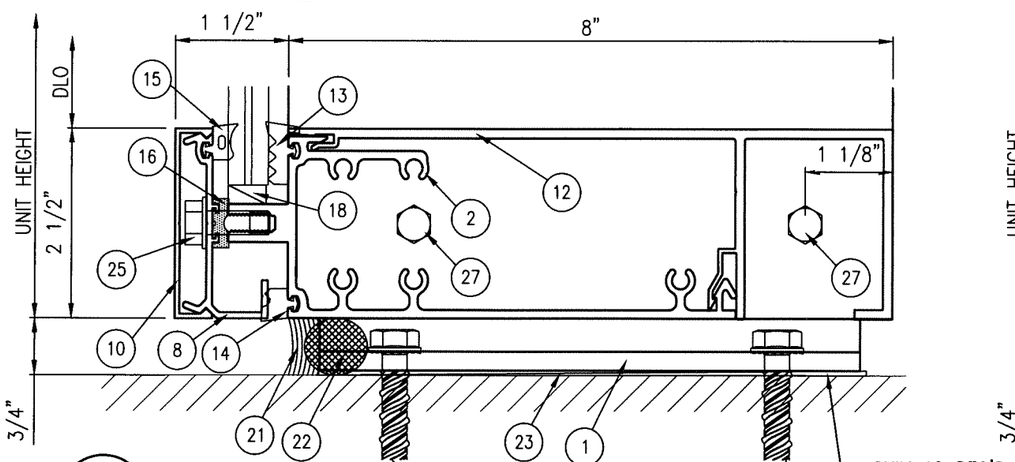

1 SILL
9/16" (Dry Glazed)

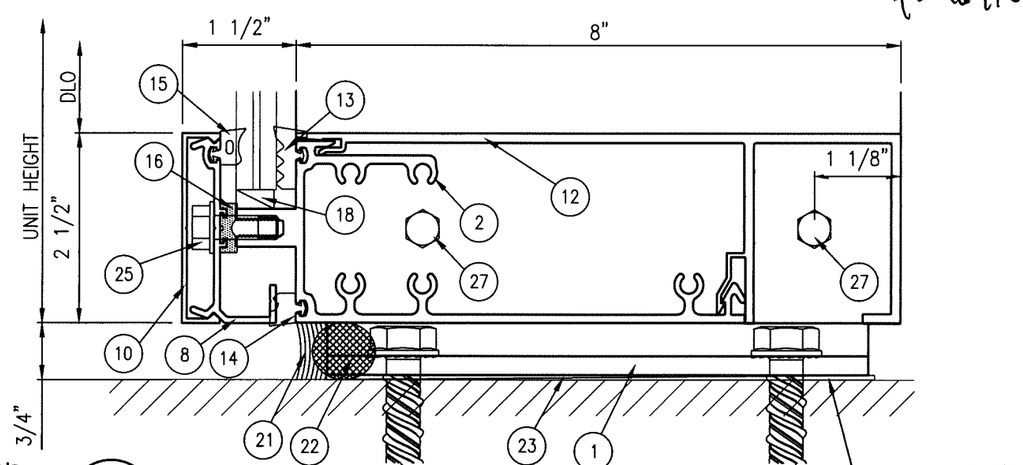

4 SILL AT JAMB
9/16" (Dry Glazed)

GORDON D. THOMAS
LICENSE
No. 46718
STATE OF FLORIDA
PROFESSIONAL ENGINEER
7/24/25
FL 46718

5008 TAMPA WEST BLVD.
TAMPA, FLORIDA 33634
PHONE: (813) 889-0718
FAX: (813) 886-0666

SUN METALS

PRODUCT: SUN 2500PW SMALL MISSILE IMPACT

PART OR ASSEMBLY: HORIZONTAL DETAILS 9/16" GLAZING

NO	DATE	DESCRIPTION	BY
3	7/14/25	UPDATE TO 8TH ED. (2023) FBC	ECV
2	9/21/20	UPDATE TO 7TH ED. (2020) FBC	JCB
1	5/23/17	REVISE GLAZING	ECV

REVISIONS

DATE: 08/22/18

SCALE: HALF

DWG. BY: CO

CHK BY: ECV

DRAWING NO.: FL-21463.2

SHEET: 4 OF 12

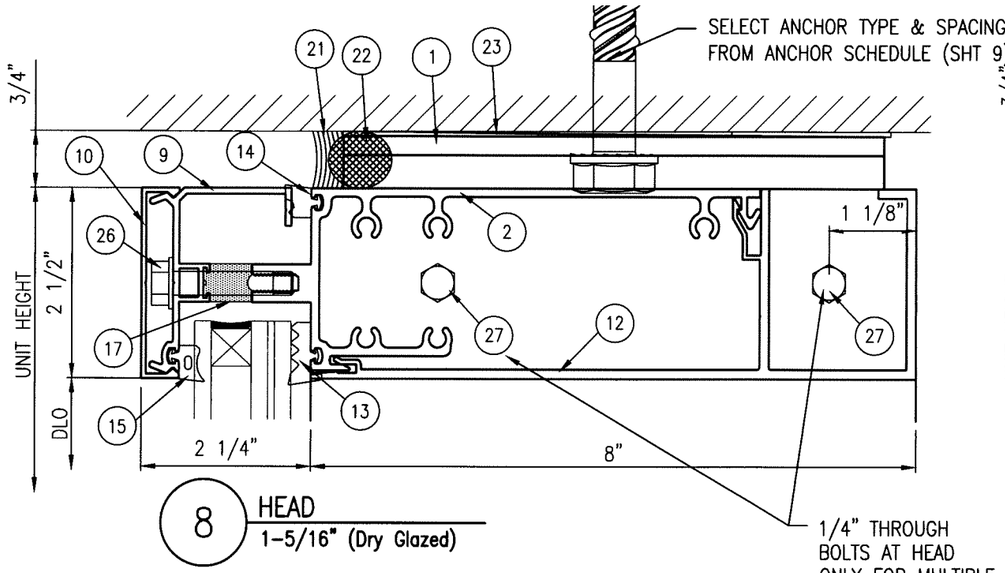

8 HEAD
1-5/16" (Dry Glazed)

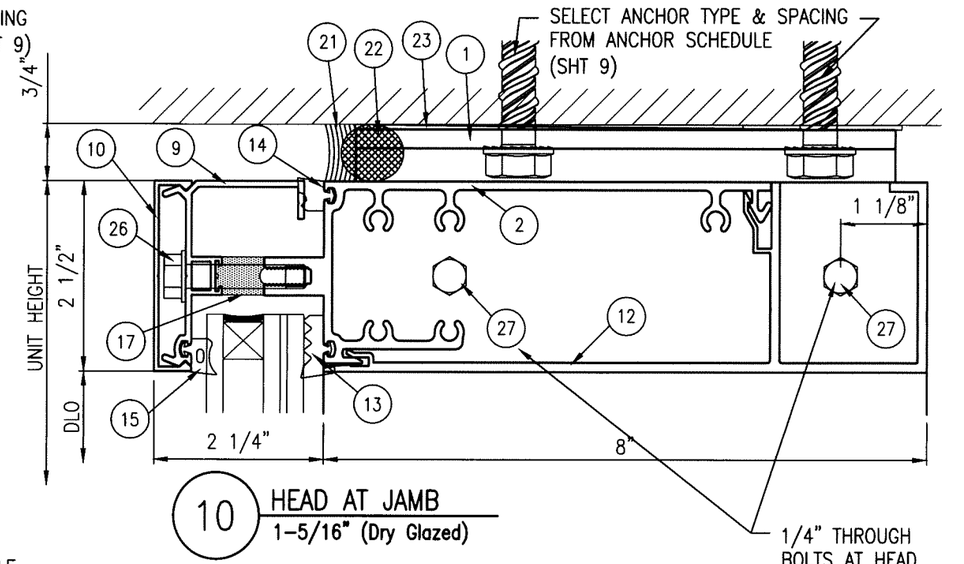

10 HEAD AT JAMB
1-5/16" (Dry Glazed)

1-5/16" GLAZING

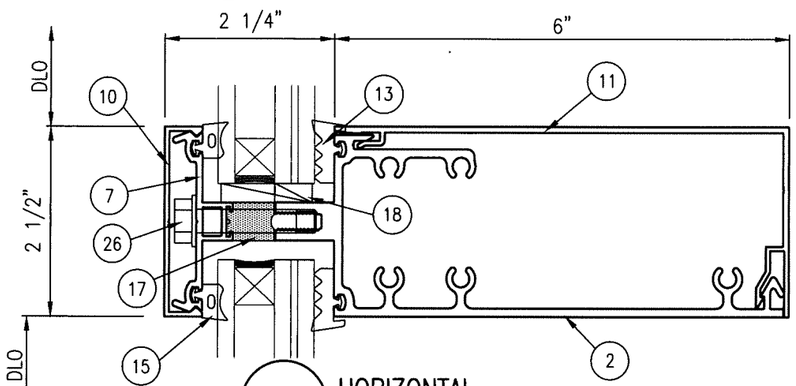

7 HORIZONTAL
1-5/16" (Dry Glazed)

NOTES:

1. FRAME HEAD, SILL AND HORIZONTALS ARE ATTACHED TO JAMBS/MULLIONS AT EACH END WITH 1/4" X 1-1/2" FH SMS.
2. REFERENCE SHEET 12 FOR GLAZING DETAILS.

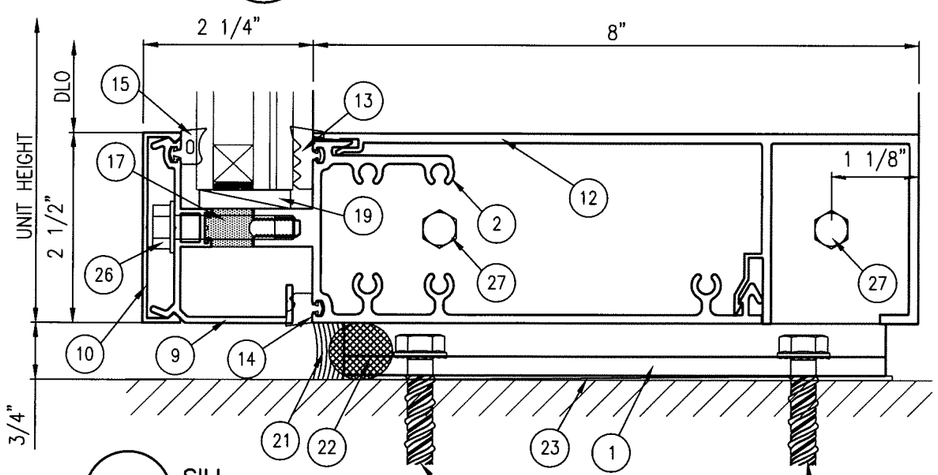

6 SILL
1-5/16" (Dry Glazed)

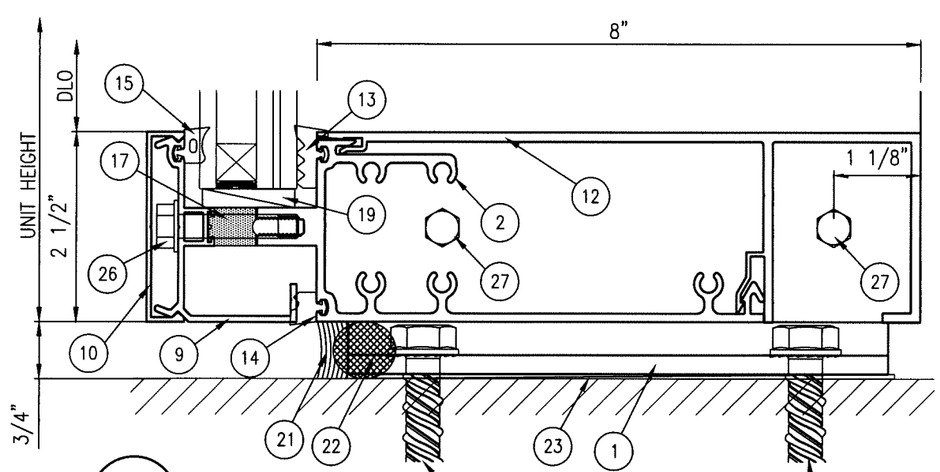

9 SILL AT JAMB
1-5/16" (Dry Glazed)

GORDON D. THOMAS
LICENSE
No. 46718
STATE OF FLORIDA
PROFESSIONAL ENGINEER

7/26/25
FL 46718

5008 TAMPA WEST BLVD.
TAMPA, FLORIDA 33634
PHONE: (813) 889-0718
FAX: (813) 886-0666

SUN METALS

PRODUCT: SUN 2500PW SMALL MISSILE IMPACT

PART OR ASSEMBLY: HORIZONTAL DETAILS 1-5/16" GLAZING

NO	DATE	DESCRIPTION	BY
3	7/14/25	UPDATE TO 8TH ED. (2023) FBC	ECV
2	9/21/20	UPDATE TO 7TH ED. (2020) FBC	JCB
1	5/23/17	REVISE GLAZING	ECV

REVISIONS

DATE: 08/22/18

SCALE: HALF

DWG. BY: CO

CHK BY: ECV

DRAWING NO.: FL-21463.2

SHEET: 5 OF 12

GORDON D. THOMAS
LICENSE
No. 46718
STATE OF FLORIDA
PROFESSIONAL ENGINEER

7/24/25
FL 46718

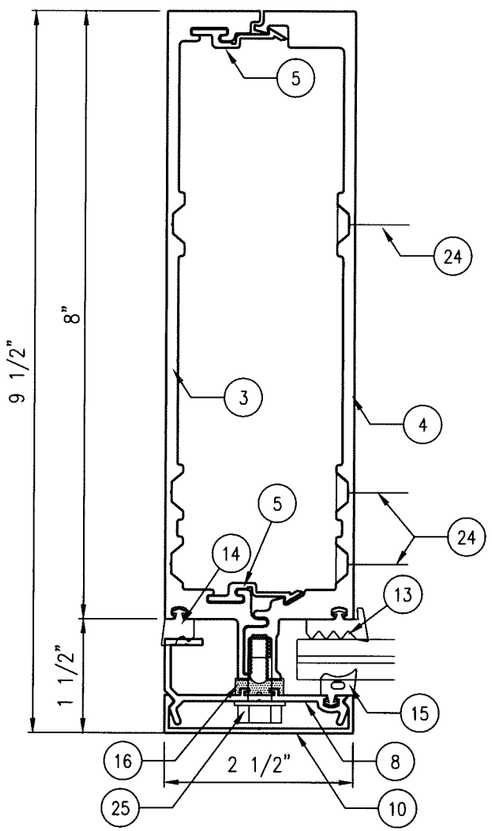

11 JAMB
9/16" (Dry Glazed)

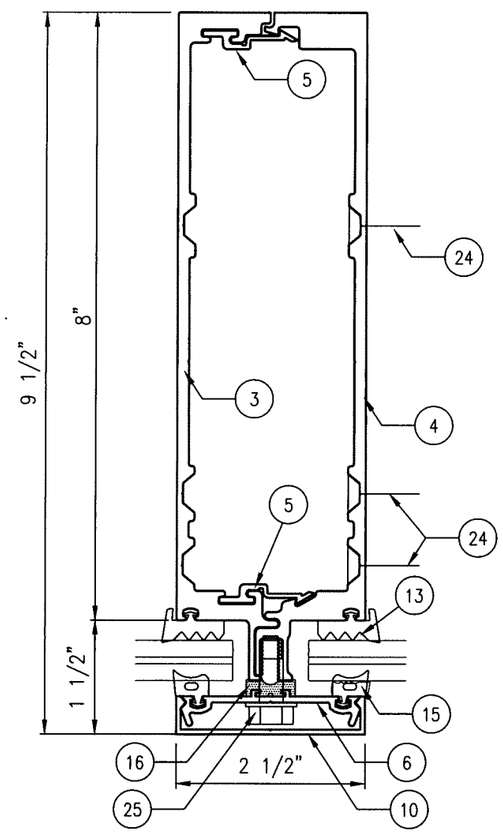

12 INTERMEDIATE VERTICAL
9/16" (Dry Glazed)

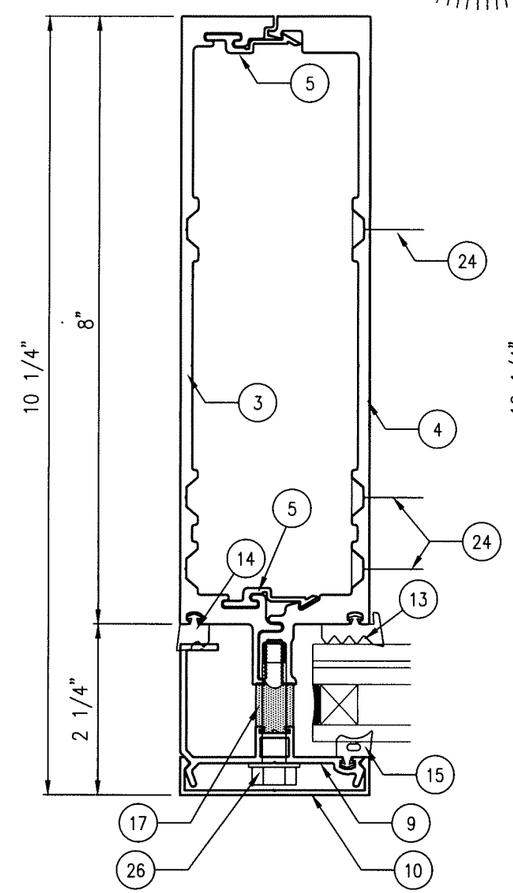

13 JAMB
1-5/16" (Dry Glazed)

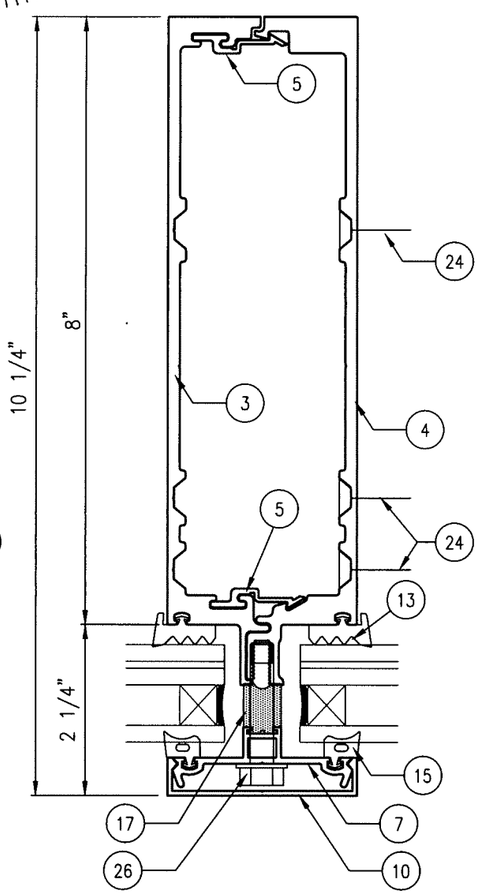

14 INTERMEDIATE VERTICAL
1-5/16" (Dry Glazed)

5008 TAMPA WEST BLVD.
TAMPA, FLORIDA 33634
PHONE: (813) 889-0718
FAX: (813) 886-0666

SUN METALS

PRODUCT: SUN 2500PW SMALL MISSILE IMPACT

PART OR ASSEMBLY: VERTICAL DETAILS

NO	DATE	DESCRIPTION	BY
3	7/14/25	UPDATE TO 8TH ED. (2023) FBC	ECV
2	9/21/20	UPDATE TO 7TH ED. (2020) FBC	JCB
1	5/23/17	REVISE GLAZING	ECV

REVISIONS

DATE: 08/22/18

SCALE: HALF

DWG. BY: CO

CHK BY: ECV

DRAWING NO.: FL-21463.2

SHEET: 6 OF 9

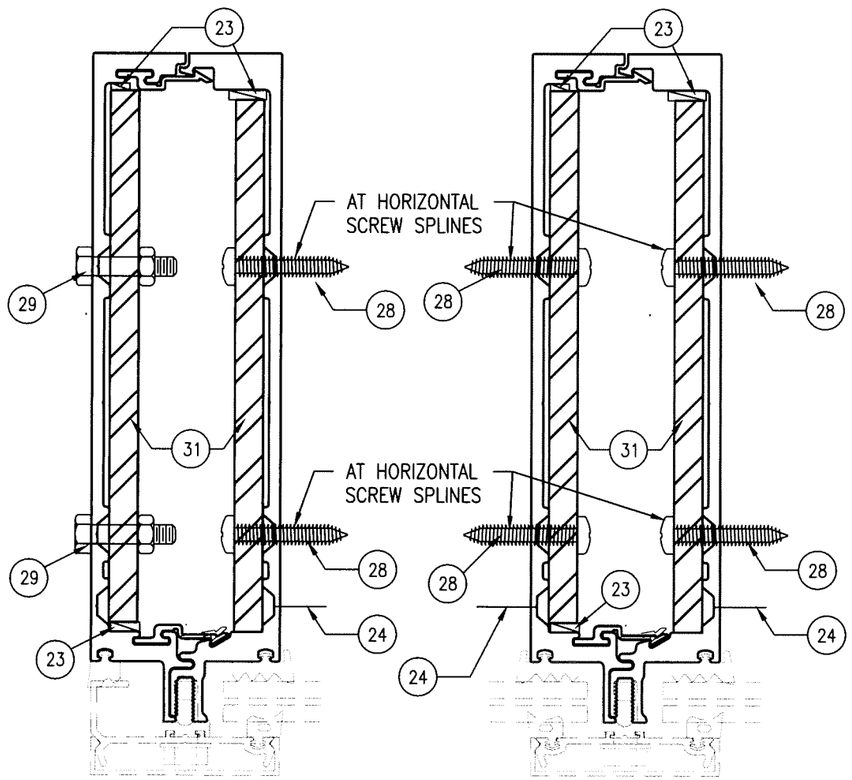

15 JAMB

16 INTERMEDIATE VERTICAL

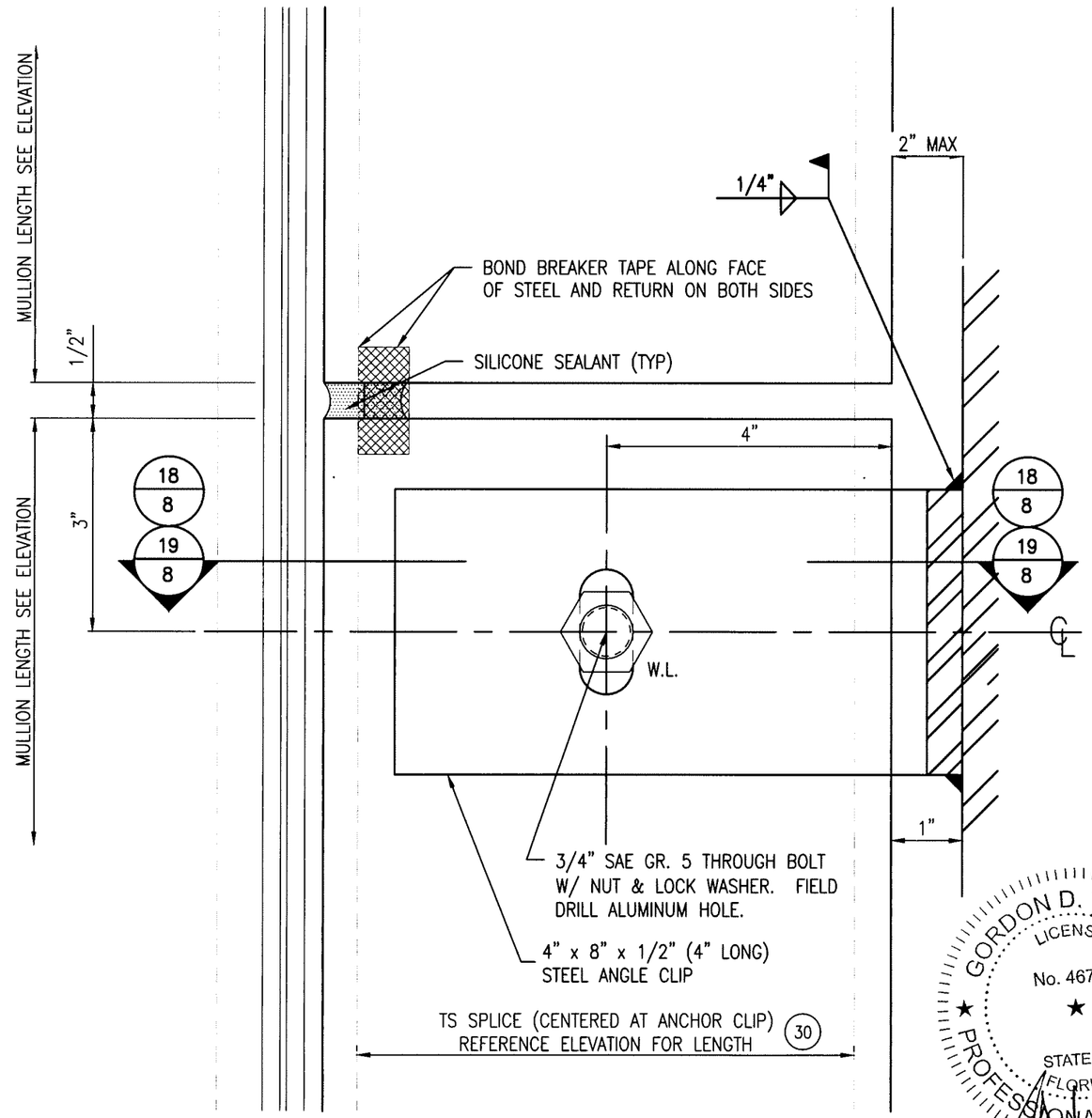

17 SECTION AT MIDPT ANCHOR

GORDON D. THOMAS
LICENSE
No. 46718
STATE OF FLORIDA
PROFESSIONAL ENGINEER

7/26/25
FL 46718

5008 TAMPA WEST BLVD.
TAMPA, FLORIDA 33634
PHONE: (813) 889-0718
FAX: (813) 886-0666

SUN METALS

PRODUCT: SUN 2500PW SMALL MISSILE IMPACT

PART OR ASSEMBLY: REINFORCING DETAILS AND SECTION AT STACK JOINT

NO	DATE	DESCRIPTION	BY
3	7/14/25	UPDATE TO 8TH ED. (2023) FBC	ECV
2	9/21/20	UPDATE TO 7TH ED. (2020) FBC	JCB
1	5/23/17	REVISE GLAZING	ECV

REVISIONS

DATE: 08/22/18

SCALE: HALF

DWG. BY: CO

CHK BY: ECV

DRAWING NO.: FL-21463.2

SHEET: 7 OF 12

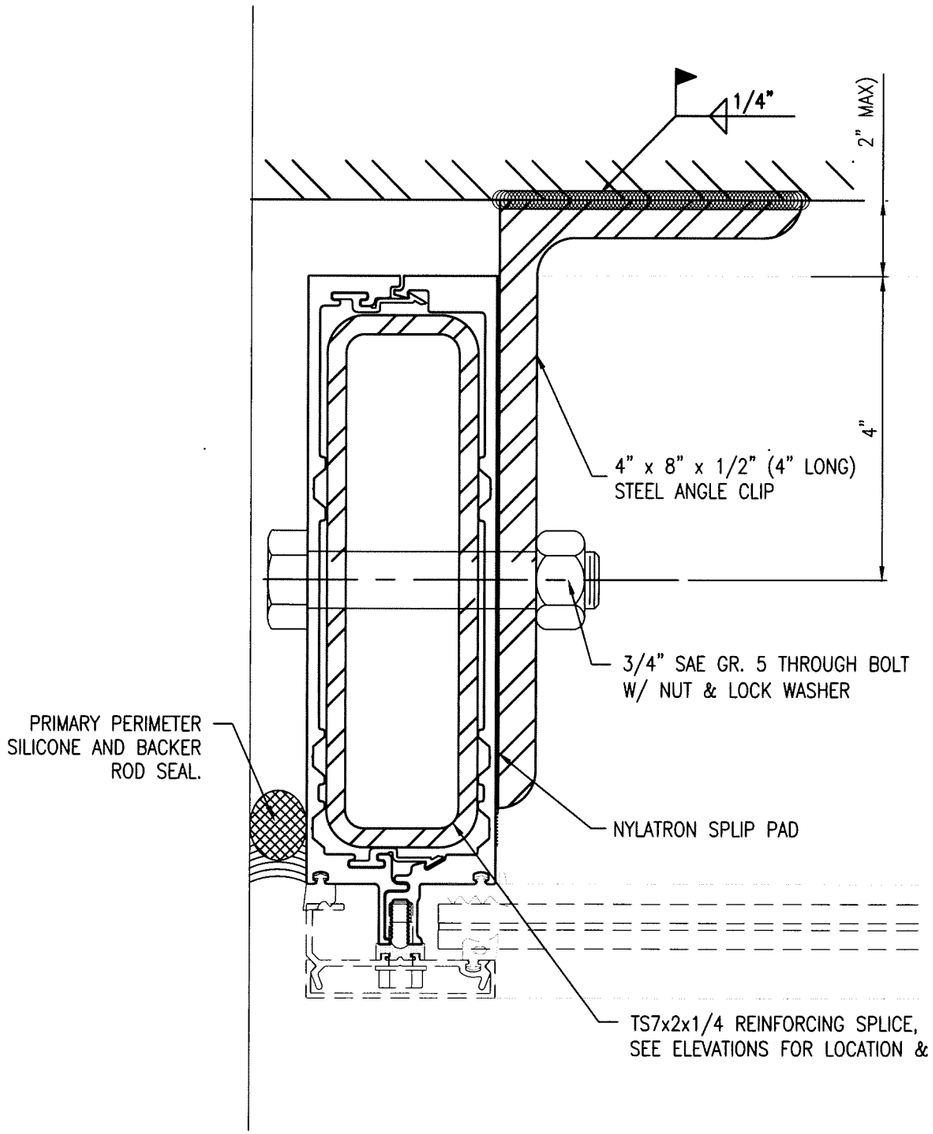

18 JAMB MIDPT ANCHOR

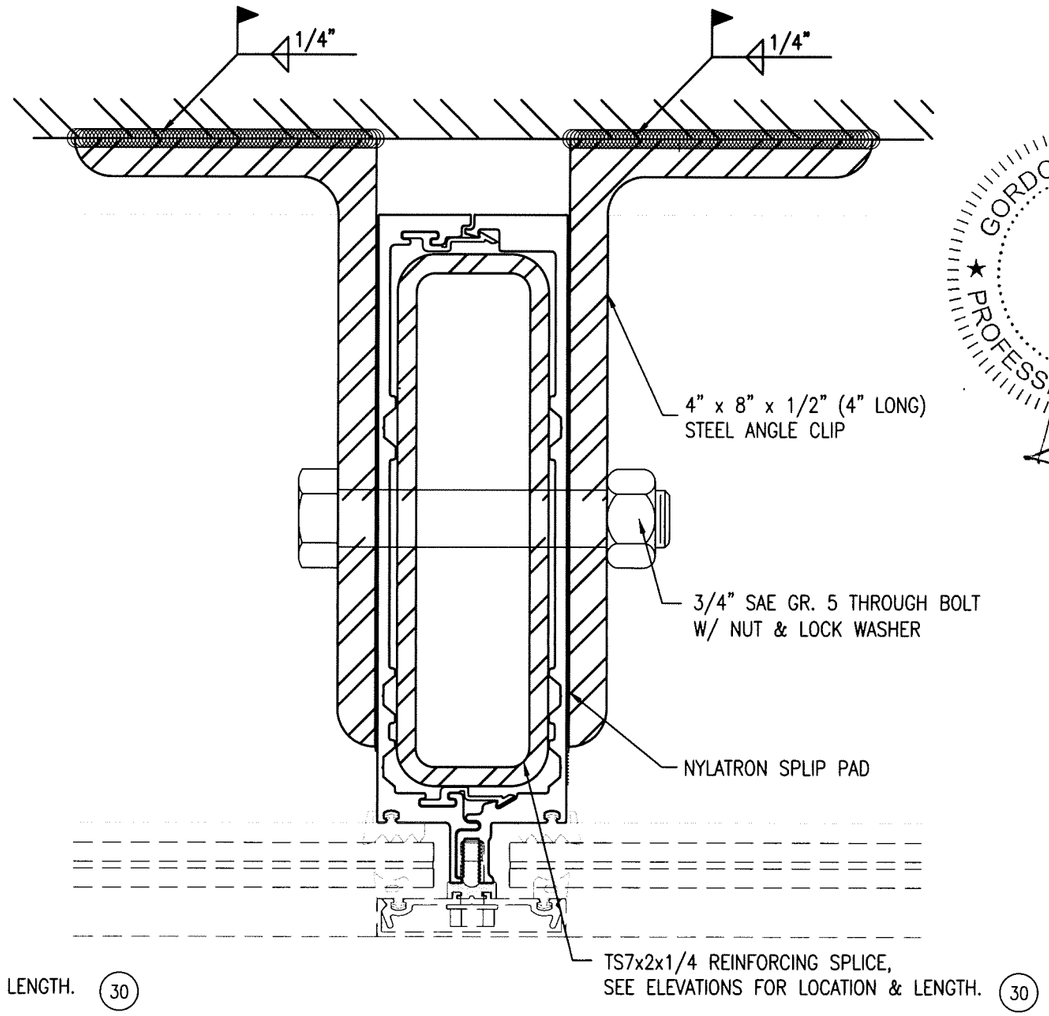

19 MULLION MIDPT ANCHOR

GORDON D. THOMAS
LICENSE
No. 46718
STATE OF
FLORIDA
PROFESSIONAL ENGINEER

7/26/25
FL 46718

5008 TAMPA WEST BLVD.
TAMPA, FLORIDA 33634
PHONE: (813) 889-0718
FAX: (813) 886-0666

SUN METALS

PRODUCT: SUN 2500PW SMALL MISSILE IMPACT

PART OR ASSEMBLY: DETAILS INTERMEDIATE ANCHORS

NO	DATE	DESCRIPTION	BY
3	7/14/25	UPDATE TO 8TH ED. (2023) FBC	ECV
2	9/21/20	UPDATE TO 7TH ED. (2020) FBC	JCB
1	5/23/17	REVISE GLAZING	ECV

REVISIONS

DATE: 08/22/18

SCALE: HALF

DWG. BY: CO

CHK BY: ECV

DRAWING NO.: FL-21463.2

SHEET: 8 OF 12

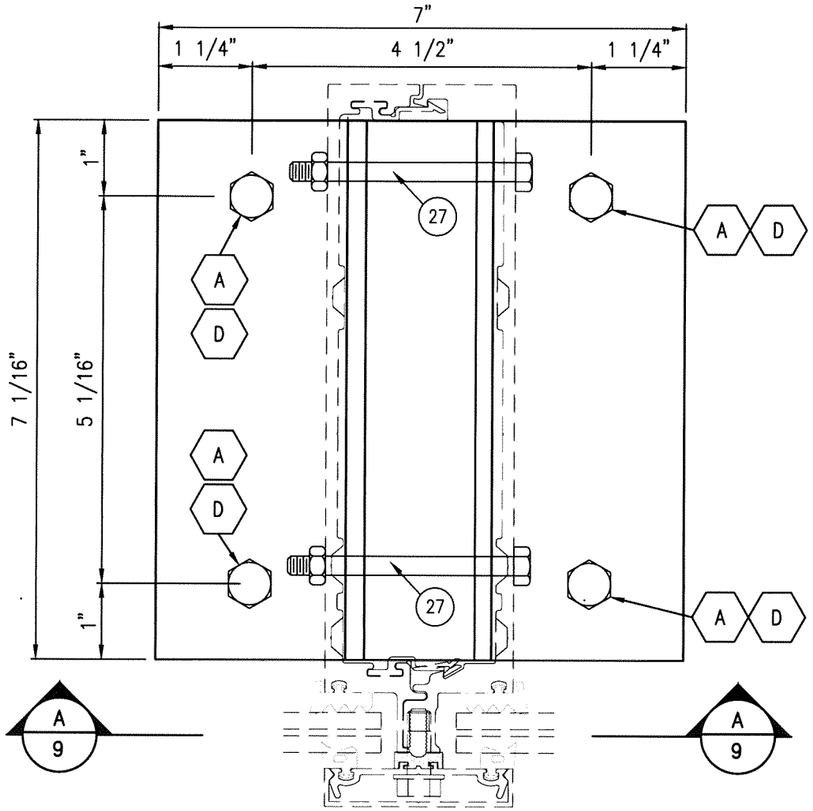

20 SILL ANCHOR CLIP
EXTRUDED ALUMINUM CLIP

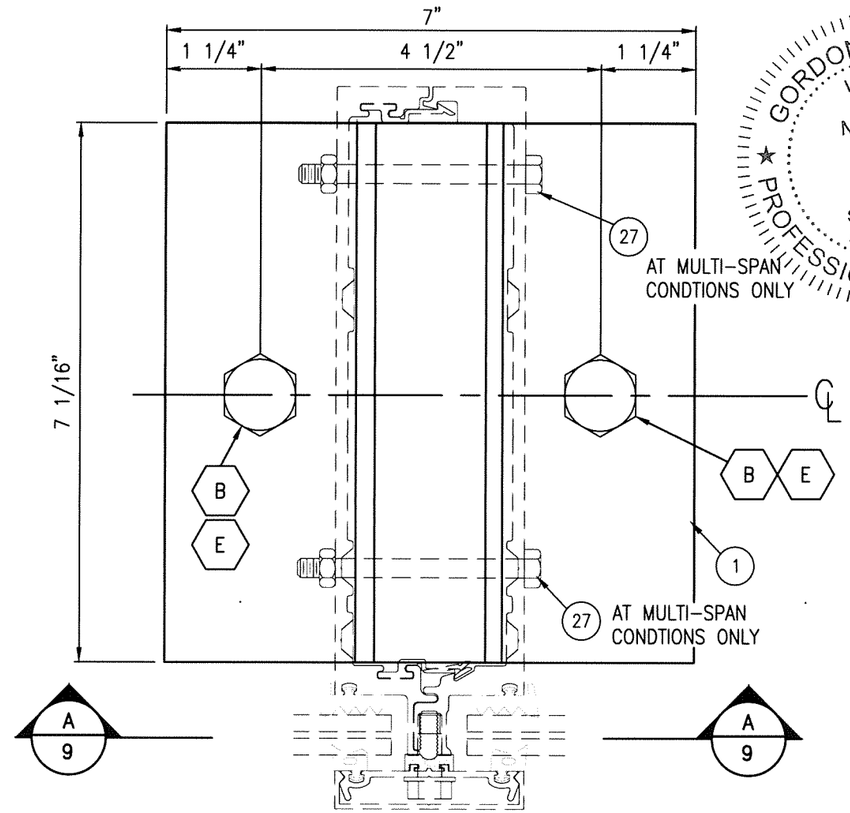

21 HEAD ANCHOR CLIP
EXTRUDED ALUMINUM CLIP

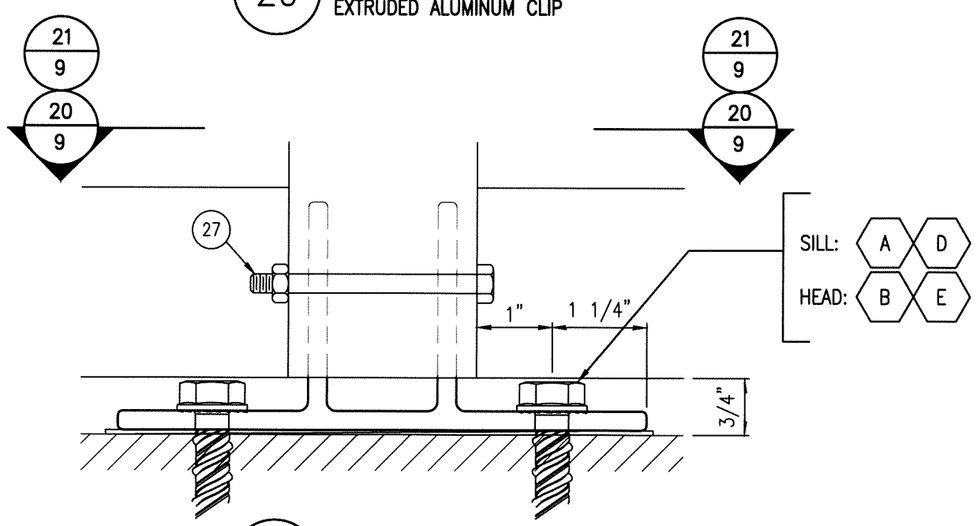

AA HEAD/SILL ANCHOR CLIP
EXTRUDED ALUMINUM CLIP

ANCHOR SCHEDULE

PRIMARY HEAD AND SILL ANCHORS

SUBSTRATE	ANCHOR TYPE	DESCRIPTION
CONCRETE	A	3/8" Powers Wedge Bolt with 3-1/2" min embedment, 5" mininum edge distance. Concrete is 3,000 PSI minimum conforming to ACI 301.
	B	5/8" Powers Wedge Bolt with 6" min embedment. Concrete is 3,000 PSI minimum conforming to ACI 301,.
	C	1/2" Powers Wedge Bolt with 4" min embedment. Concrete is 3,000 PSI minimum conforming to ACI 301,.
STEEL	D	3/8" Carbon Steel GR5 Bolt. Drill and tap into 1/4" steel (min) or clear hole with nut and lock washer.
	E	5/8" Carbon Steel GR5 Bolt. Drill and tap into 1/4" steel (min) or clear hole with nut and lock washer.
	F	1/2" Carbon Steel GR5 Bolt. Drill and tap into 1/4" steel (min) or clear hole with nut and lock washer.

GORDON D. THOMAS
LICENSE
No. 46718
STATE OF FLORIDA
PROFESSIONAL ENGINEER
7/26/25
FL 46718

5008 TAMPA WEST BLVD.
TAMPA, FLORIDA 33634
PHONE: (813) 889-0718
FAX: (813) 886-0666

SUN METALS

PRODUCT: SUN 2500PW SMALL MISSILE IMPACT

PART OR ASSEMBLY: DETAILS AT INTERMEDIATE VERTICAL HEAD AND SILL ANCHOR CLIPS

NO	DATE	DESCRIPTION	BY
3	7/14/25	UPDATE TO 8TH ED. (2023) FBC	ECV
2	9/21/20	UPDATE TO 7TH ED. (2020) FBC	JCB
1	5/23/17	REVISE GLAZING	ECV

REVISIONS

DATE: 08/22/18
SCALE: HALF
DWG. BY: CO
CHK BY: ECV
DRAWING NO.: FL-21463.2
SHEET: 9 OF 12

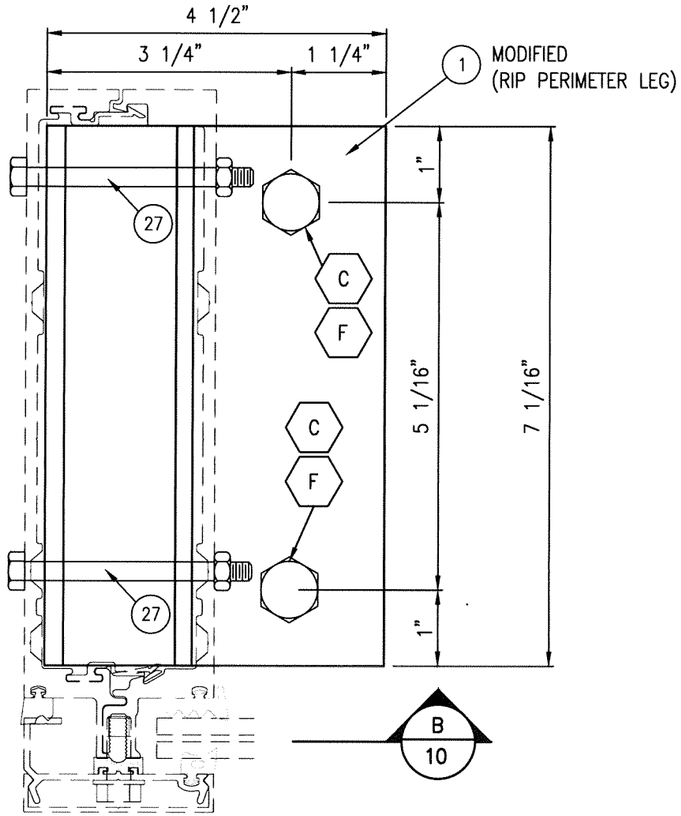

22 SILL ANCHOR CLIP
EXTRUDED ALUMINUM CLIP

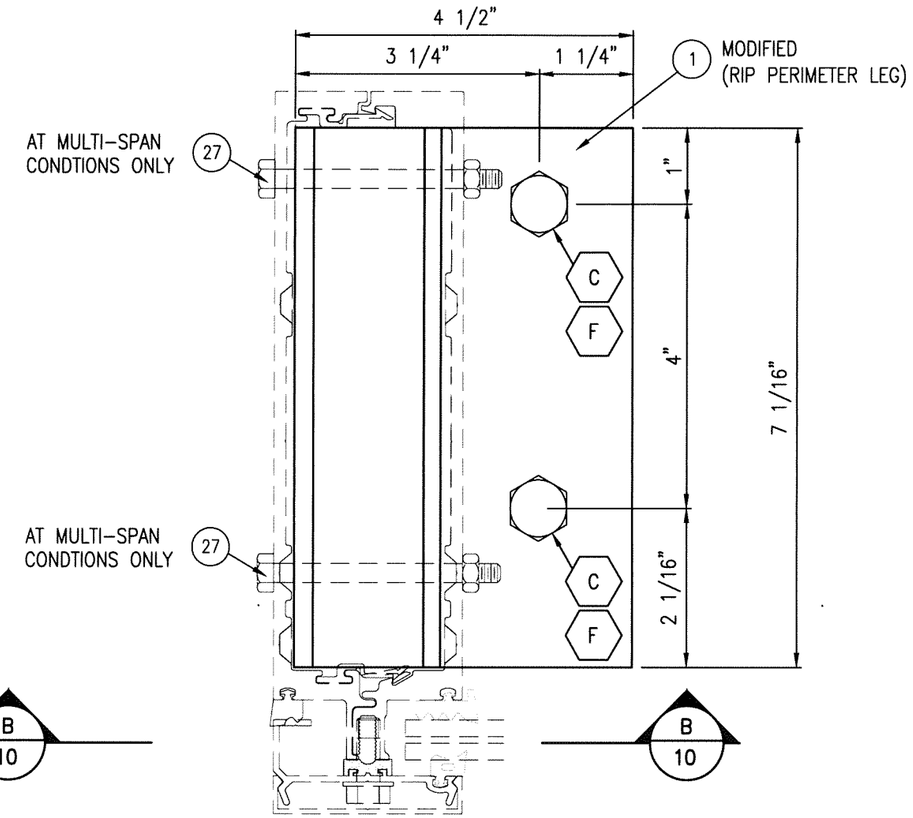

23 HEAD ANCHOR CLIP
EXTRUDED ALUMINUM CLIP

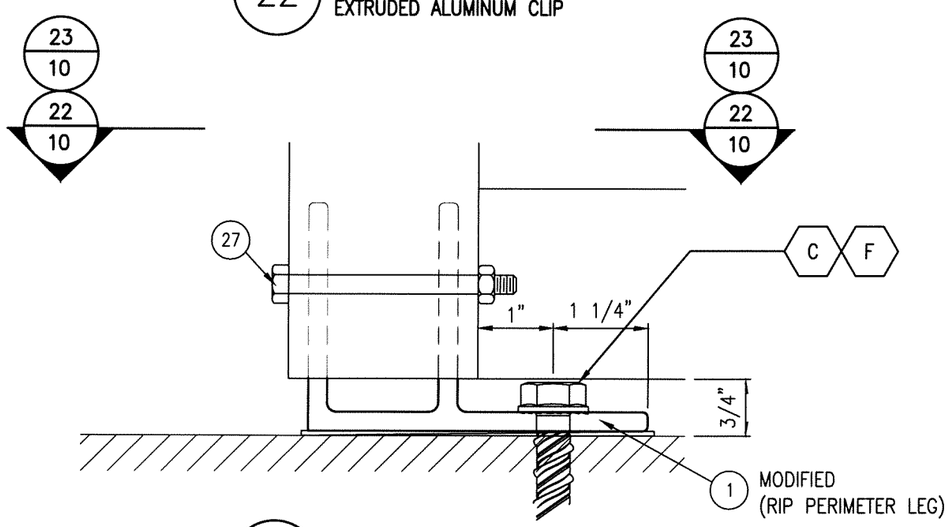

BB HEAD/SILL JAMB ANCHOR CLIP
EXTRUDED ALUMINUM CLIP

REFERENCE SHEET 9
FOR ANCHOR SCHEDULE

GORDON D. THOMAS
LICENSE
No. 46718
STATE OF
FLORIDA
PROFESSIONAL ENGINEER
7/26/25
FL 46718

5008 TAMPA WEST BLVD.
TAMPA, FLORIDA 33634
PHONE: (813) 889-0718
FAX: (813) 886-0666

SUN METALS

PRODUCT: SUN 2500PW SMALL MISSILE IMPACT

PART OR ASSEMBLY: DETAILS AT JAMB HEAD AND SILL ANCHOR CLIPS

REVISIONS

NO	DATE	DESCRIPTION	BY
3	7/14/25	UPDATE TO 8TH ED. (2023) FBC	ECV
2	9/21/20	UPDATE TO 7TH ED. (2020) FBC	JCB
1	5/23/17	REVISE GLAZING	ECV

DATE: 08/22/18
SCALE: HALF
DWG. BY: CO
CHK BY: ECV
DRAWING NO.: FL-21463.2
SHEET: 10 OF 12

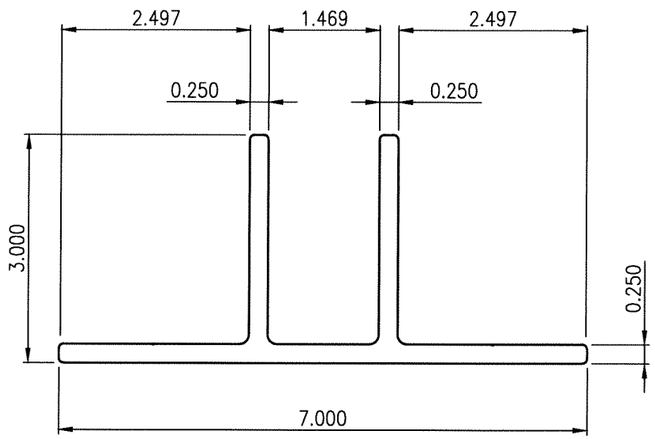

1 SUN-2502 ANCHOR CLIP

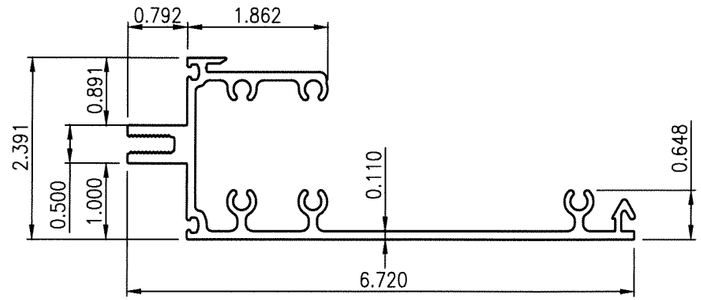

2 SUN-2515 HEAD/SILL/HORIZONATAL

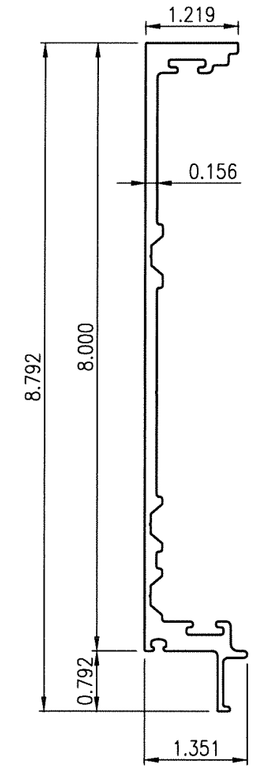

3 SUN-2519 SPLIT MULLION

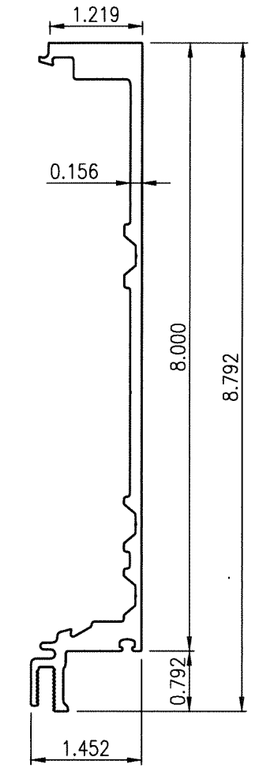

4 SUN-2520 SPLIT MULLION

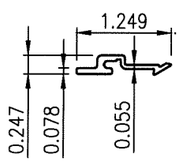

5 SUN-2525 SPRING CLIP

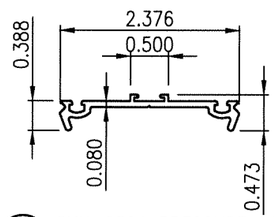

6 SUN-2504 PRESSURE BAR

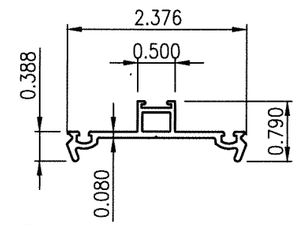

7 SUN-2524 PRESSURE BAR

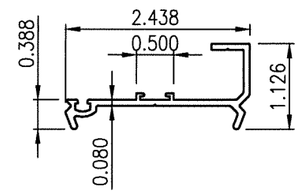

8 SUN-2503 PRESSURE BAR

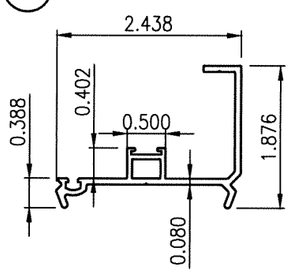

9 SUN-2523 PRESSURE BAR

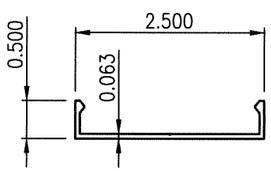

10 SUN-2505 FACE CAP

GORDON D. THOMAS
LICENSE
No. 46718
STATE OF FLORIDA
PROFESSIONAL ENGINEER

7/24/25
FL 46718

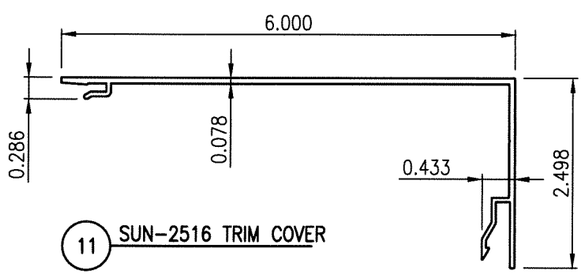

11 SUN-2516 TRIM COVER

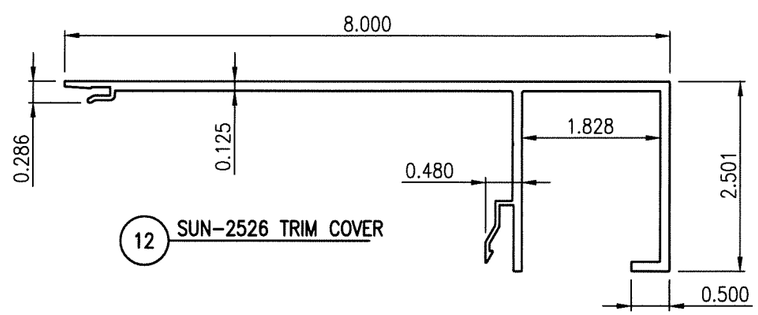

12 SUN-2526 TRIM COVER

13 INTERIOR GLAZING GASKET
TR-15597E

14 INTERIOR SPONGE
TR-6142N

15 PRESSURE BAR GASKET
TR-11591E

16 ISOLATOR (9/16")
G-1838

17 ISOLATOR (1-5/16")
TR-23498E

500B TAMPA WEST BLVD.
TAMPA, FLORIDA 33634
PHONE: (813) 889-0718
FAX: (813) 886-0666

SUN METALS

PRODUCT: SUN 2500PW SMALL MISSILE IMPACT

PART OR ASSEMBLY: COMPONENTS

NO	DATE	DESCRIPTION	BY
3	7/14/25	UPDATE TO 8TH ED. (2023) FBC	ECV
2	9/21/20	UPDATE TO 7TH ED. (2020) FBC	JCB
1	5/23/17	REVISE GLAZING	ECV

REVISIONS

DATE: 08/22/18

SCALE: HALF

DWG. BY: CO

CHK BY: ECV

DRAWING NO.: FL-21463.2

SHEET: 11 OF 12

BILL OF MATERIALS

ITEM #	PART #	DESCRIPTION	MATERIAL	MANUFACTURER	NOTES
1	SUN-2502	ANCHOR CLIP	6005-T5	SUN METALS	
2	SUN-2515	HEAD/ SILL/HORIZONTAL	6005-T5	SUN METALS	
3	SUN-2519	SPLIT MULLION	6005-T5	SUN METALS	
4	SUN-2520	SPLIT MULLION	6005-T5	SUN METALS	
5	SUN-2525	SPRING CLIP	6063-T6	SUN METALS	
6	SUN-2504	PRESSURE BAR (9/16", 1" GLAZING)	6063-T6	SUN METALS	
7	SUN-2524	PRESSURE BAR (1-5/16" GLAZING)	6063-T6	SUN METALS	
8	SUN-2503	JAMB PRESSURE BAR (9/16" GLAZING)	6063-T6	SUN METALS	
9	SUN-2523	JAMB PRESSURE BAR (1-5/16" GLAZING)	6063-T6	SUN METALS	
10	SUN-2505	FACE CAP	6063-T6	SUN METALS	
11	SUN-2516	HORIZONTAL TRIM COVER	6063-T6	SUN METALS	
12	SUN-2526	HEAD/SILL TRIM COVER	6063-T6	SUN METALS	
13	TR-15597E	INTERIOR GLAZING GASKET	EPDM	TREMCO	Durometer: 70+/-5
14	TR-6142N	INTERIOR SPONGE	NEOPRENE	TREMCO	Sponge
15	TR-11591E	PRESSURE BAR GASKET	EPDM	TREMCO	Durometer: 70+/-5
16	G-1838	ISOLATOR (9/16" GLAZING)	EPDM	GRP	Durometer: 75+/-5
17	TR-23498E	ISOLATOR (1-5/16" GLAZING)	EPDM	TREMCO	Durometer: 80+/-5
18		1/4" X 4" SETTING BLOCK	SILICONE	VARIES	
19		1/4" X 4" SETTING BLOCK	SILICONE	VARIES	
20		NOT USED			
21		PERIMETER WEATHERSEAL	SILICONE	DOW CORNING	DOW 790, 791, 795 OR APPROVED EQ.
22	SOF ROD	BACKER ROD		TREMCO	FRICTION FIT CLOSED CELL NON-GASSING
23		SHIM	POLYSTYRENE	VARIES	FULL BEARING HIGH IMPACT POLYSTYRENE
24		#14 x 1-1/2" FH S/S FRAME ASSY SCREWS	18-8 SS	VARIES	
25		5/16" X 3/4" F-POINT PRESSURE BAR SCREW	18-8 SS	VARIES	
26		5/16" X 1-1/2" F-POINT PRESSURE BAR SCREW	18-8 SS	VARIES	
27		1/4" X 3" S/S BOLTS WITH NUTS AND LOCK WASHER	18-8 SS	VARIES	
28		1/4" X 2" S/S PH SMS	18-8 SS	VARIES	
29		1/4" X 1-1/4" S/S BOLTS WITH NUT AND LOCK WASHER	18-8 SS	VARIES	
30		TS7"x2"x1/4" STEEL SPLICE	GR C	VARIES	
31		7"x3/8" STEEL BAR REINFORCING	A36	VARIES	
32		ALUMINUM SPACER	6063-T5	VARIES	

GORDON D. THOMAS
LICENSE
No. 46718
STATE OF FLORIDA
PROFESSIONAL ENGINEER

7/26/25
FL 46718

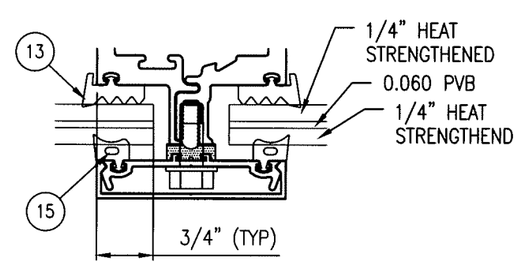

G1 GLAZING TYPE G1
9/16" LAMINATED (PVB)
DRY GLAZED

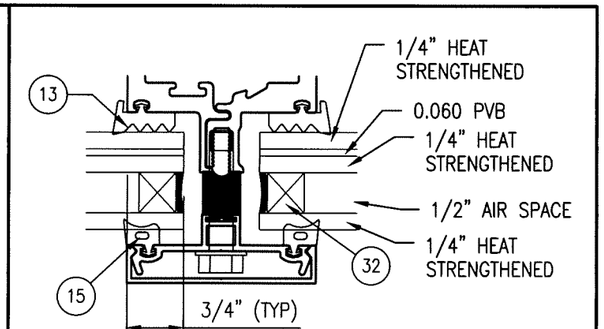

G2 GLAZING TYPE G2
1-5/16" LAMINATED (PVB)
DRY GLAZED

5008 TAMPA WEST BLVD.
TAMPA, FLORIDA 33634
PHONE: (813) 889-0718
FAX: (813) 886-0666

SUN METALS

PRODUCT: SUN 2500PW SMALL MISSILE IMPACT

PART OR ASSEMBLY: BILL OF MATERIALS AND GLAZING TYPES

NO	DATE	DESCRIPTION	BY
3	7/14/25	UPDATE TO 8TH ED. (2023) FBC	ECV
2	9/21/20	UPDATE TO 7TH ED. (2020) FBC	JCB
1	5/23/17	REVISE GLAZING	ECV

REVISIONS

DATE: 08/22/18

SCALE: HALF

DWG. BY: CO

CHK BY: ECV

DRAWING NO.: FL-21463.2

SHEET: 12 OF 12